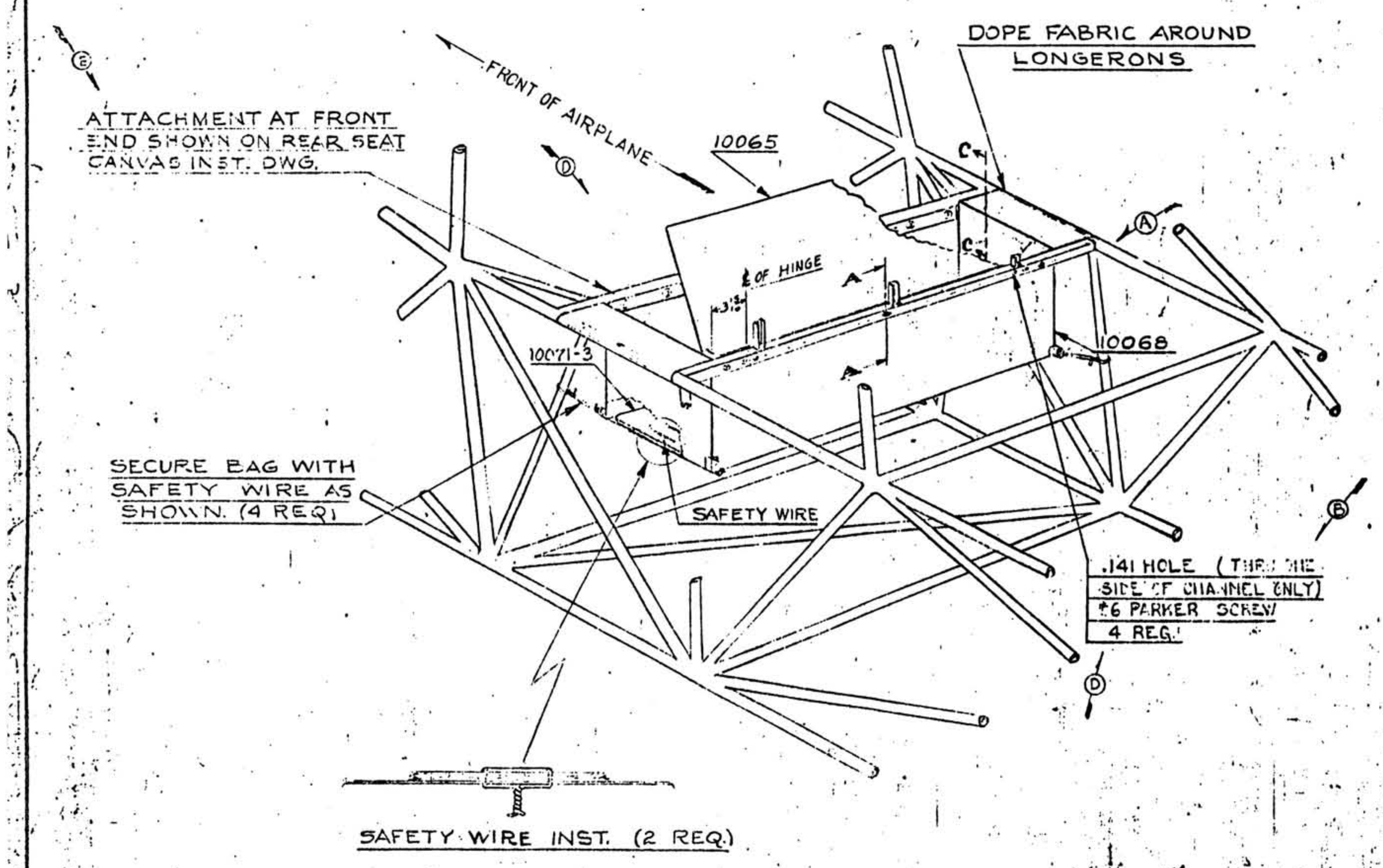
ATTACHMENT AT FRONT END SHOWN ON REAR SEAT CANVAS INST. DWG.
FRONT OF AIRPLANE
10065
DOPE FABRIC AROUND LONGERONS
Ⓓ
Ⓔ
Ⓐ
C
C
A
A
℄ OF HINGE
.31½
10071-3
10068
SECURE BAG WITH SAFETY WIRE AS SHOWN. (4 REQ.)
SAFETY WIRE
.141 HOLE (THRU ONE SIDE OF CHANNEL ONLY) #6 PARKER SCREW 4 REQ.
Ⓑ
Ⓓ

SAFETY WIRE INST. (2 REQ.)

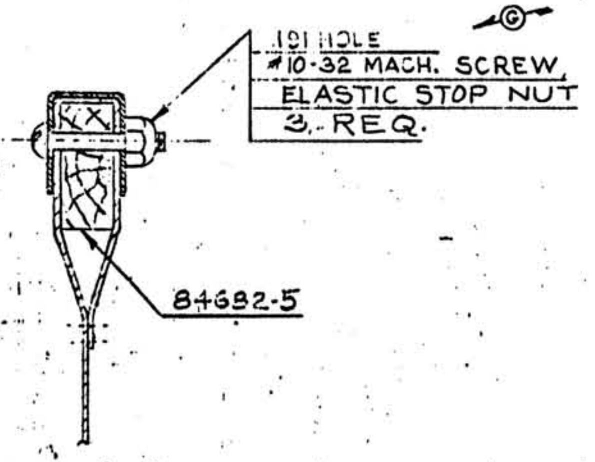
.191 HOLE
#10-32 MACH. SCREW,
ELASTIC STOP NUT
3. REQ.
Ⓖ
84682-5

SEC. A-A
FULL SIZE

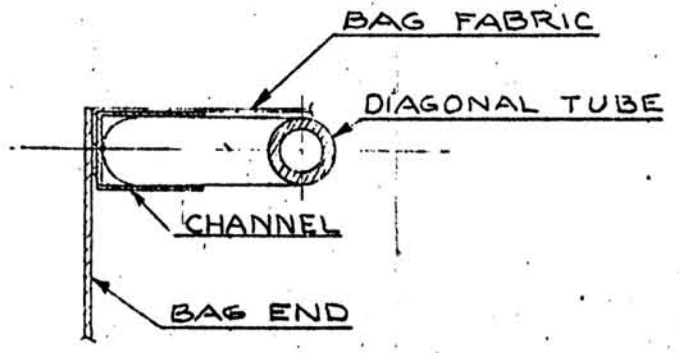
BAG FABRIC
DIAGONAL TUBE
CHANNEL
BAG END

SEC. C-C
FULL SIZE

ⓀⒻ

PART No.	No. REQ.	SIZE	DESCRIPTION / MATERIAL
#10-32	3	ELASTIC STOP NUT	
#10-32	3	1 LONG	#1010 STL. CAD. PLATE, RD. HD. MACH. SCREW
#6	4	⅜ LONG	TYPE "A" STOVE LID. PK. SCREW
	1	.032 X 30	BRASS SAFETY WIRE
84682-5	1	BLOCK	
10071-3	1	BOTTOM	
10068	1	BAG ASSEMBLY	
10065	1	LID ASSEMBLY	

SCALE NOTED
TOTAL WT.-LBS.
FINISH—PIPER SPECIFICATION #10
MANUFACTURING PRACTICES—PIPER SPECIFICATION #9

LET.	REVISION	DATE	BY
K	RD. HD. MACH. SCREW WAS FLAT HD	11-26-46	C.L.W.
J	3½; 13½; 12, 3 CSK 82° .372 REM	9-5-46	C.E.K.
H	10067, 10065-1 [illegible] 4 PK. SCR. REM.	8-14-46	H.M.Z.
G	CSK. DIM. ADDED TO .191 HOLE	2-25-46	C.E.V.
F	[illegible] FLAT HD. SCREW WAS OVAL HD.	2-25-46	C.E.V.
E	[illegible]	2-11-46	C.E.K.
D	SEC. B-B REMOVED, VIEW REVISED	2-11-46	C.E.K.
C	[illegible]	[illegible]	[illegible]
B	HOLE NOTE ADDED	[illegible]	[illegible]
A	[illegible]	1-17-46	[illegible]

THIS DRAWING IS THE PROPERTY OF THE PIPER AIRCRAFT CORP. AND ITS POSSESSION BY UNAUTHORIZED PERSONS SHALL NOT BE CONSTRUED AS PERMISSION TO REPRODUCE FOR SALE, IN WHOLE OR IN PART, ANY DEVICES SHOWN THEREON.

MODEL	PER PLANE	NEXT ASSEMBLY	SUPERSEDES	SUP. BY
J5C	1	24186	51492	

PIPER AIRCRAFT CORP.
LOCK HAVEN, PENNA.

COMPARTMENT INSTALLATION - BAGGAGE

DRAFTSMAN	CHECKER	STANDARDS
J. B. M. 9-20-45	E. C. T. 9-21-45	

10067

PHILADELPHIA BLUE PRINT CO.